9. Automatic Transmission Assembly

A: REMOVAL

1) Set the vehicle on a lift.
2) Open the front hood and support with the hood stay.
3) Disconnect the ground cable from the battery.
4) Remove the air intake chamber and intake duct. (Non-turbo model) <Ref. to IN(H4SO)-6, REMOVAL, Air Intake Chamber.>
5) Remove the intercooler. (Turbo model) <Ref. to IN(H4DOTC)-13, REMOVAL, Intercooler.>
6) Remove the air intake chamber stay. (Non-turbo model)

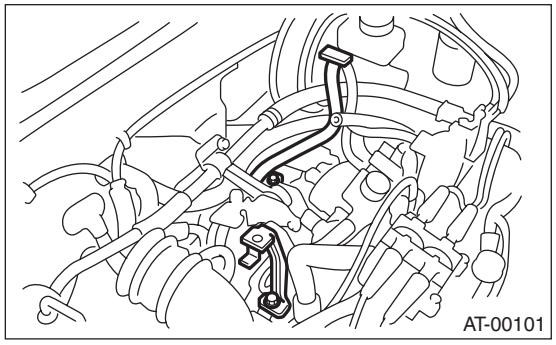

7) Disconnect the following connectors.
   (1) Transmission harness connectors

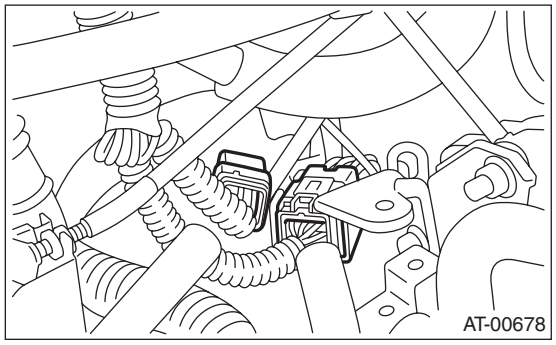

   (2) Transmission ground terminal
8) Remove the starter. <Ref. to SC(H4SO)-8, REMOVAL, Starter.>
9) Remove the throttle body. <Ref. to FU(H4SO)-12, REMOVAL, Throttle Body.> <Ref. to FU(H4DOTC)-16, REMOVAL, Throttle Body.>
10) Remove the pitching stopper.

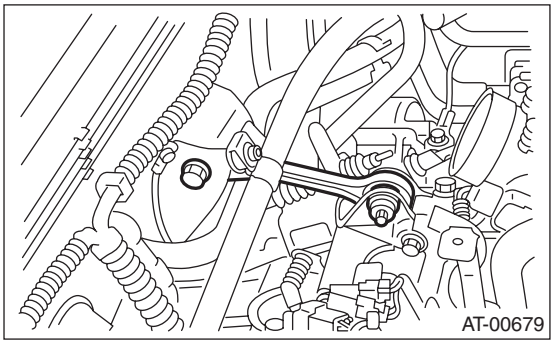

11) Separate the torque converter clutch from the drive plate.

CAUTION:
- **Be careful not to damage the mounting bolts.**
- **Be careful not to drop bolts into the converter case.**

   (1) Install the V-belt cover.
   (2) Remove the service hole plug.
   (3) Remove the bolts which hold the torque converter clutch to the drive plate.
   (4) While rotating the crank pulley in the direction of engine rotation a little bit at a time, remove all bolts.

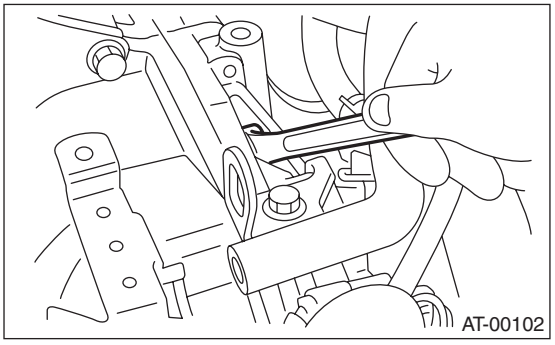

12) Attach the ST to the converter case.
ST 498277200 STOPPER SET

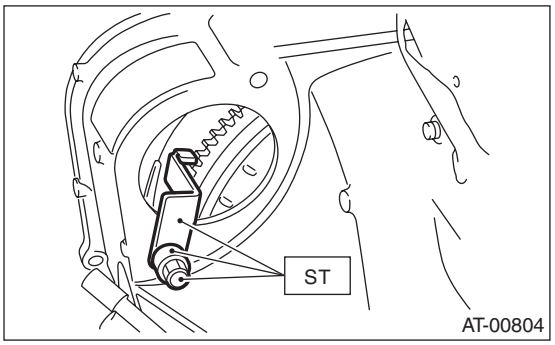

13) Remove the ATF level gauge.

NOTE:
Plug the opening to prevent entry of foreign particles into the transmission fluid.

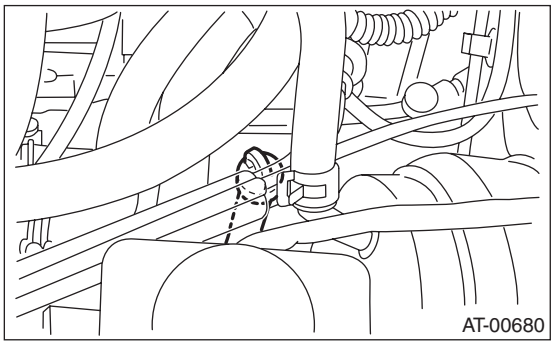

14) Remove the pitching stopper bracket.
15) Set the ST.
ST 41099AC000 ENGINE SUPPORT ASSY

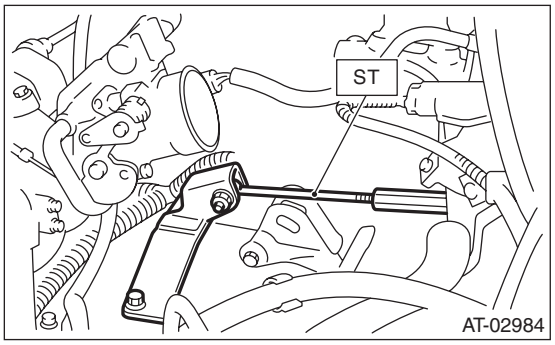

16) Remove the bolts which hold the upper side of the transmission to the engine.

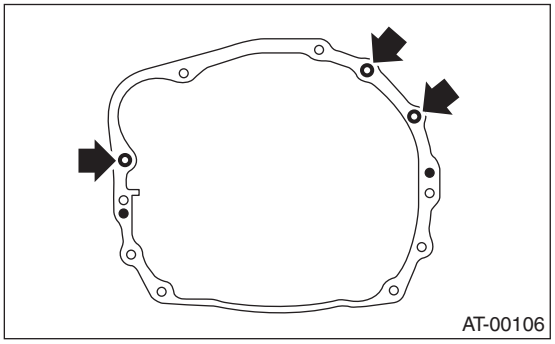

17) Lift up the vehicle.
18) Remove the under cover.
19) Remove the front, center and rear exhaust pipes and the muffler. (Non-turbo model) <Ref. to EX(H4SO)-4, REMOVAL, Front Exhaust Pipe.> <Ref. to EX(H4SO)-8, REMOVAL, Rear Exhaust Pipe.> <Ref. to EX(H4SO)-9, REMOVAL, Muffler.>
20) Remove the center and rear exhaust pipes and the muffler. (Turbo model) <Ref. to EX(H4DOTC)-10, REMOVAL, Center Exhaust Pipe.> <Ref. to EX(H4DOTC)-15, REMOVAL, Rear Exhaust Pipe.> <Ref. to EX(H4DOTC)-17, REMOVAL, Muffler.>

21) Remove the ATF drain plug to drain ATF.

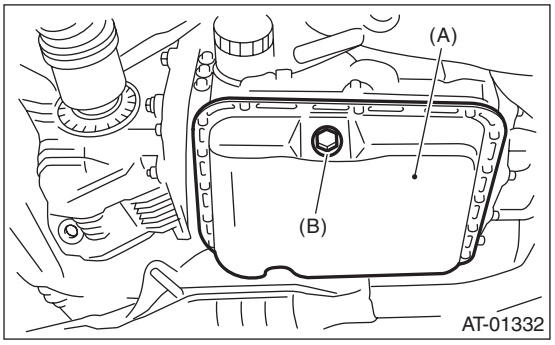

(A) Oil pan
(B) Drain plug (ATF)

22) Disconnect the ATF cooler hoses from the pipes of the transmission side, and remove the oil charge pipe.

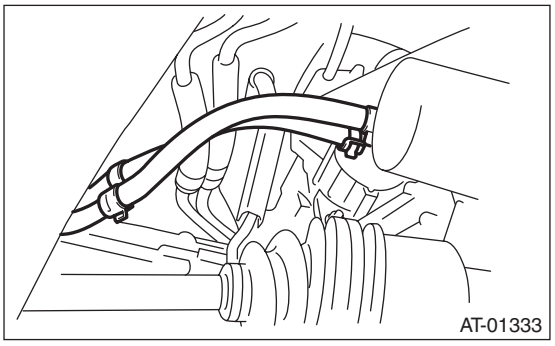

23) Remove the propeller shaft. <Ref. to DS-15, REMOVAL, Propeller Shaft.>
24) Remove the shift select cable. <Ref. to CS-27, REMOVAL, Select Cable.>
25) Disconnect the stabilizer link from the transverse link.
26) Remove the bolt securing the ball joint of the transverse link to housing.

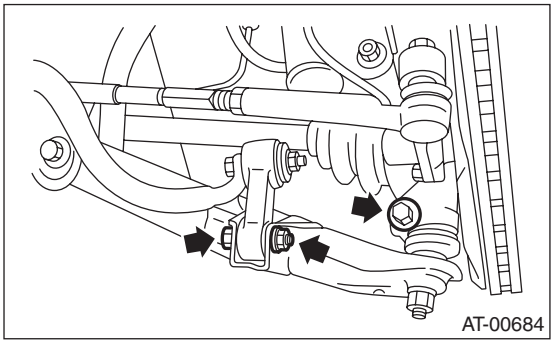

27) Pull out the front drive shaft from the transmission.
(1) Using a tire lever or a crow bar, etc., pull out until the front drive shaft transmission side joint slides move smoothly.

NOTE:
Place cloth between the tire lever or bar and the transmission in order to avoid damaging the transmission side retainer.

(2) Hold the transmission side joint of the front drive shaft by hand and extract the housing from the transmission while pressing the housing outward, so as not to stretch the boot.

28) Remove the bolts which hold the clutch housing cover.

29) Remove the bolts which hold the lower side of transmission to the engine.

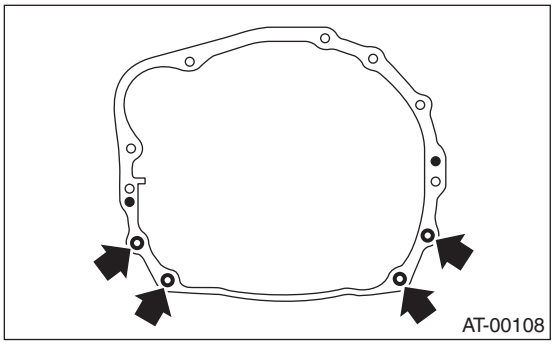

30) Place a transmission jack below the transmission.

NOTE:
Make sure that the support plates of transmission jack do not touch the oil pan.

31) Remove the transmission rear crossmember from the vehicle.

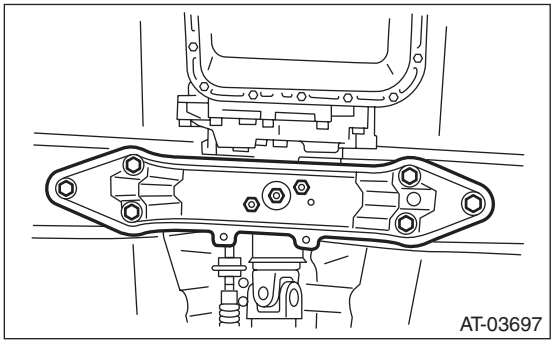

32) While lowering the transmission jack gradually, fully retract the engine support, and then tilt the engine rearward.

33) Remove the transmission.

NOTE:
Remove the transmission and torque converter as a single unit from engine.

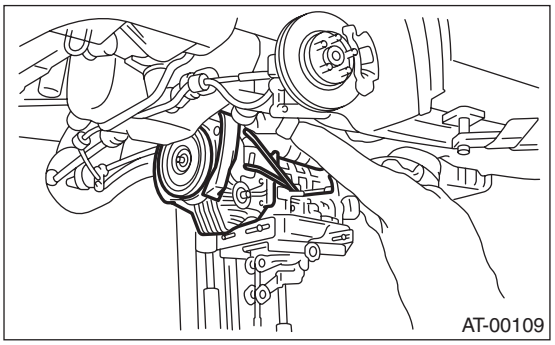

34) Remove the rear cushion rubber from the transmission assembly.

B: INSTALLATION

1) Replace the differential side oil seal with a new part. <Ref. to 4AT-46, REPLACEMENT, Differential Side Retainer Oil Seal.>

NOTE:
When a new oil seal has been installed, replacement is not required.

2) Install the rear cushion rubber to the transmission assembly.

Tightening torque:
39 N·m (4.0 kgf-m, 29 ft-lb)

3) Attach the ST to the converter case.

ST 498277200 STOPPER SET

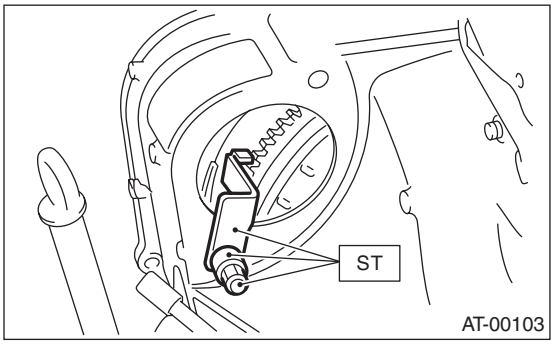

4) Install the transmission onto the engine.

(1) Lift up the transmission gradually using transmission jack.

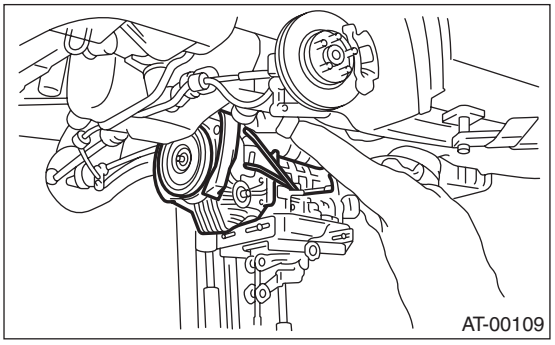

(2) Connect the transmission and the engine.
(3) While raising the transmission jack gradually, turn the screw of engine support, and tilt the engine forward.

5) Install the transmission rear crossmember.

Tightening torque:
T1: 35 N·m (3.6 kgf-m, 26 ft-lb)
T2: 70 N·m (7.1 kgf-m, 51.6 ft-lb)

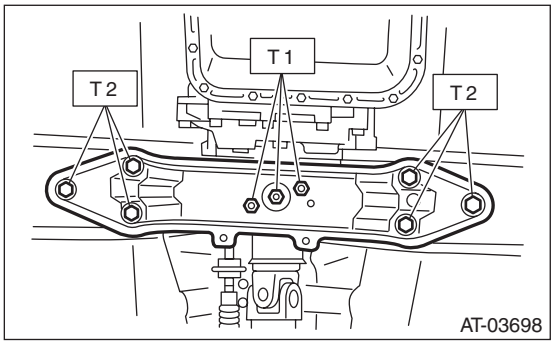

6) Remove the transmission jack.
7) Tighten the bolts which hold the lower side of the transmission to the engine.

Tightening torque:
50 N·m (5.1 kgf-m, 36.9 ft-lb)

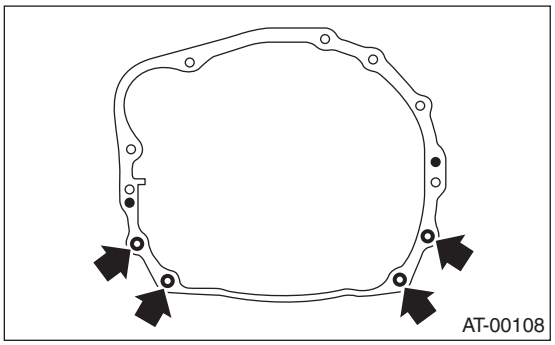

8) Tighten the bolt of the clutch housing cover.
9) Lower the lift.
10) Connect the engine and transmission.
(1) Remove the ST from converter case.

NOTE:
When removing the ST, be careful not to drop it into converter case.
ST 498277200 STOPPER SET

(2) Install the starter. <Ref. to SC(H4SO)-8, INSTALLATION, Starter.>
(3) Tighten the bolts which hold the upper side of the transmission to the engine.

Tightening torque:
50 N·m (5.1 kgf-m, 36.9 ft-lb)

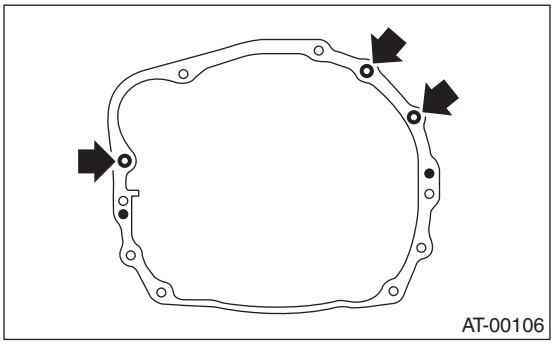

11) Install the torque converter clutch to drive plate.

CAUTION:
- **Be careful not to damage the mounting bolts.**
- **Be careful not to drop bolts into the converter case.**

(1) Tighten the bolts which hold the torque converter clutch to the drive plate.
(2) While rotating the crank pulley in the direction of engine rotation a little bit at a time, tighten all bolts.

Tightening torque:
25 N·m (2.5 kgf-m, 18.4 ft-lb)

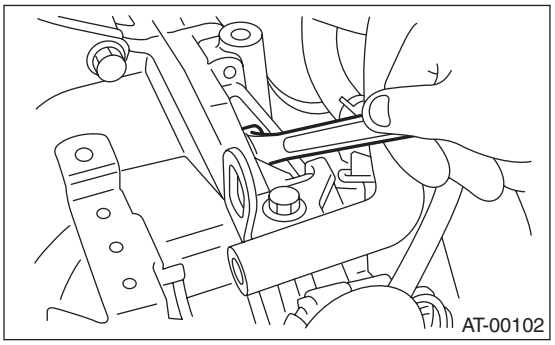

(3) Fit the plug to service hole.
(4) Install the V-belt cover.

12) Remove the ST.
ST 41099AC000 ENGINE SUPPORT ASSY

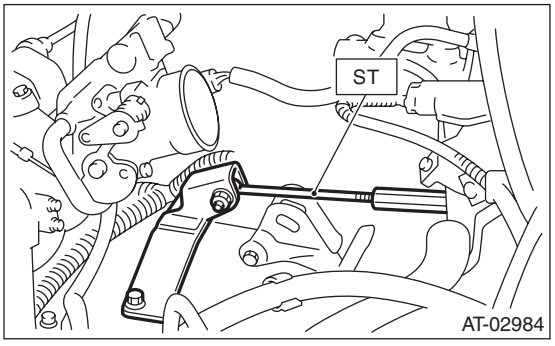

13) Install the pitching stopper bracket.

Tightening torque:
41 N·m (4.2 kgf-m, 30.2 ft-lb)

14) Install the pitching stopper.

Tightening torque:
T1: 50 N·m (5.1 kgf-m, 36.9 ft-lb)
T2: 58 N·m (5.9 kgf-m, 43 ft-lb)

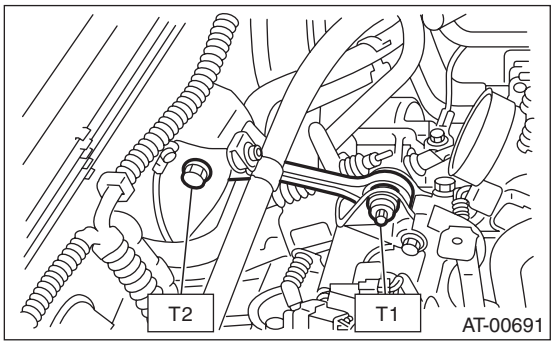

15) Install the throttle body. <Ref. to FU(H4SO)-12, INSTALLATION, Throttle Body.> <Ref. to FU(H4DOTC)-16, INSTALLATION, Throttle Body.>
16) Lift up the vehicle.
17) Replace the circlip of the front drive shaft with a new part.
18) Apply grease to the oil seal lip.
19) Attach the ST to side retainer.
ST 28399SA010 OIL SEAL PROTECTOR

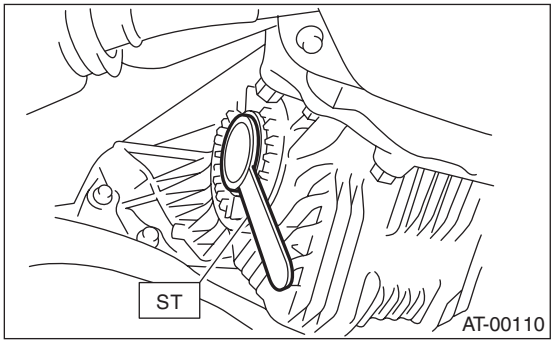

20) Align and insert the spline of the front drive shaft to the splines of the differential bevel gear, and remove the ST.
ST 28399SA010 OIL SEAL PROTECTOR
21) Insert the front drive shaft into the transmission securely by pressing the front housing from the outside.

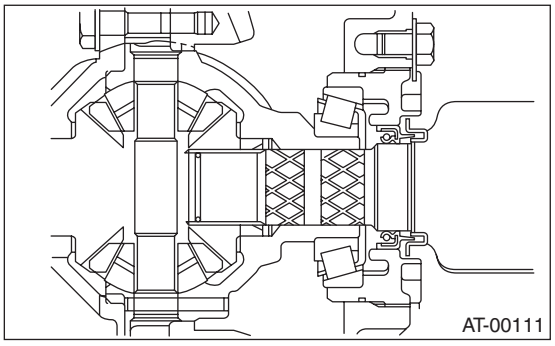

22) Install the ball joint into the housing.

23) Connect the stabilizer link to the transverse link, and tighten the bolts.

NOTE:
Use a new self-locking nut.

Tightening torque:
T1: 30 N·m (3.1 kgf-m, 22.1 ft-lb)
T2: 50 N·m (5.1 kgf-m, 36.9 ft-lb)

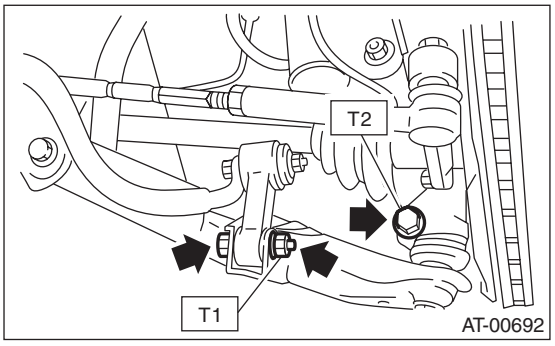

24) Install the shift select cable onto select lever. <Ref. to CS-27, INSTALLATION, Select Cable.>
25) Install the oil charge pipe, and connect the ATF cooler hoses to the pipe.

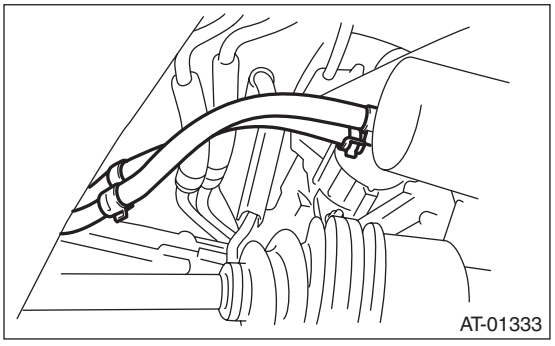

26) Install the propeller shaft. <Ref. to DS-16, INSTALLATION, Propeller Shaft.>
27) Install the rear exhaust pipe and muffler assembly.
Non-turbo model
<Ref. to EX(H4SO)-8, INSTALLATION, Rear Exhaust Pipe.> <Ref. to EX(H4SO)-9, INSTALLATION, Muffler.>
Turbo model
<Ref. to EX(H4DOTC)-15, INSTALLATION, Rear Exhaust Pipe.> <Ref. to EX(H4DOTC)-17, INSTALLATION, Muffler.>
28) Install the front and center exhaust pipe. (Non-turbo model) <Ref. to EX(H4SO)-5, INSTALLATION, Front Exhaust Pipe.>
29) Install the center exhaust pipe. (Turbo model) <Ref. to EX(H4DOTC)-11, INSTALLATION, Center Exhaust Pipe.>
30) Install the under cover.
31) Lower the lift.

32) Install the ATF level gauge.

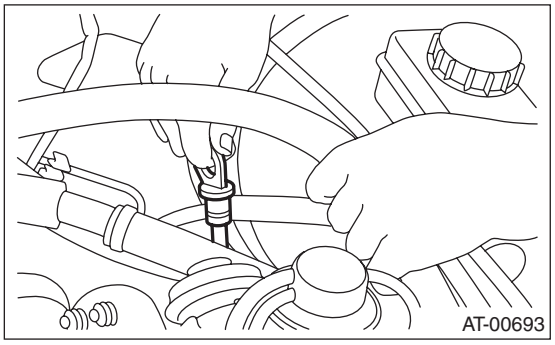

33) Connect the following connectors.
(1) Transmission harness connectors
(2) Transmission ground terminal
34) Install the air intake chamber stay.

Tightening torque:
16 N·m (1.6 kgf-m, 11.8 ft-lb)

35) Install the air intake chamber and intake duct. (Non-turbo model) <Ref. to IN(H4SO)-6, INSTALLATION, Air Intake Chamber.>
36) Install the intercooler. (Turbo model) <Ref. to IN(H4DOTC)-14, INSTALLATION, Intercooler.>
37) Connect the ground cable to the battery.
38) Using the oil charge pipe, fill with ATF until the fluid level is between the upper and lower level on the “COLD” side of the level gauge. <Ref. to 4AT-28, Automatic Transmission Fluid.>
39) Lower the vehicle from the lift.
40) Check the select lever operation. <Ref. to 4AT-47, INSPECTION, Inhibitor Switch.>
41) Bleed the air from the control valve body. <Ref. to 4AT-62, PROCEDURE, Air Bleeding of Control Valve.>
42) Check the ATF level. <Ref. to 4AT-28, Automatic Transmission Fluid.>
43) Execute learning control promotion. <Ref. to 4AT(D)(diag)-16, FACILITATION OF LEARNING CONTROL, OPERATION, Subaru Select Monitor.>
44) Perform the road test. <Ref. to 4AT-31, Road Test.>